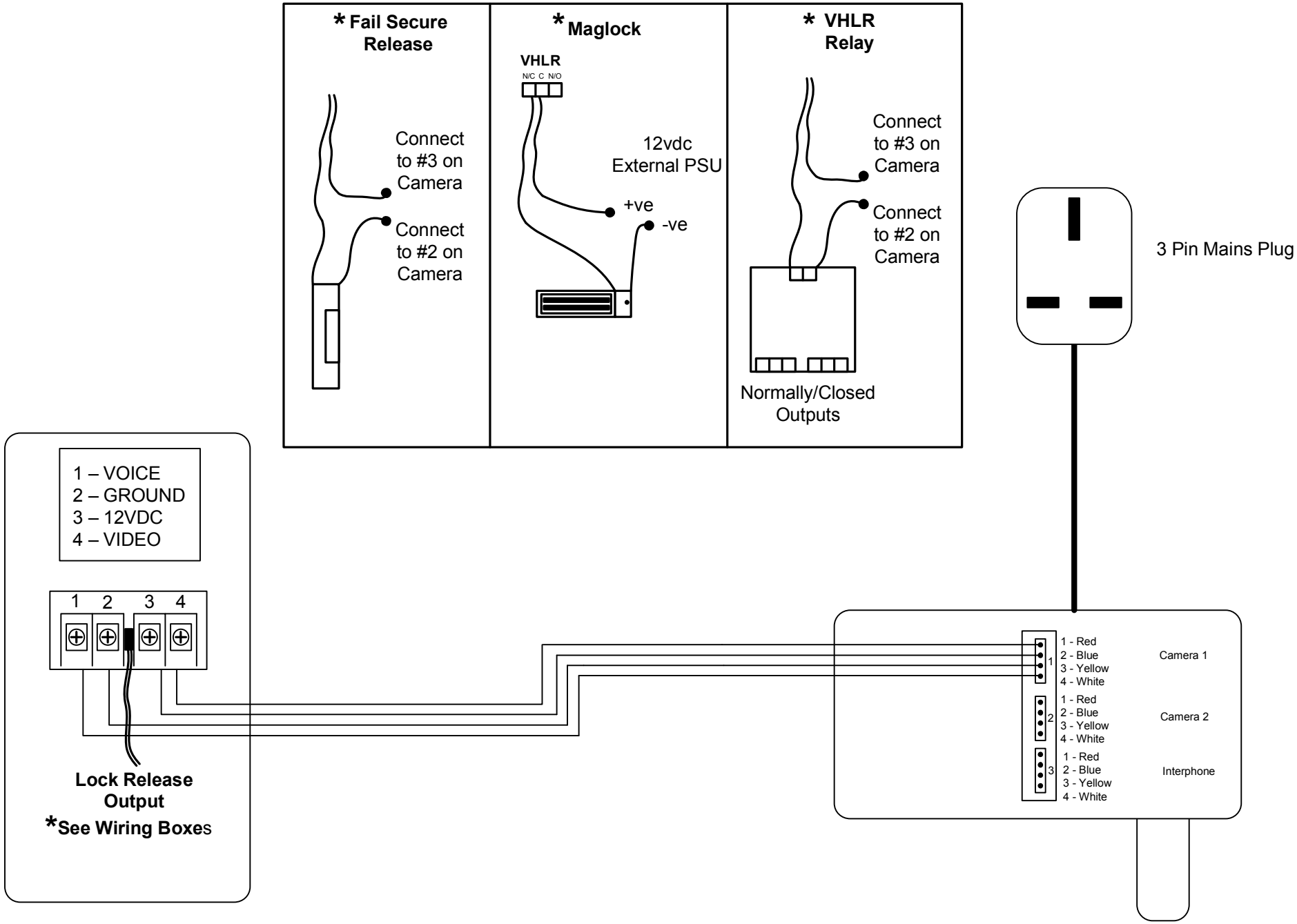Commax Standard Video Connections